evolis

Identify what matters

www.evolis.com

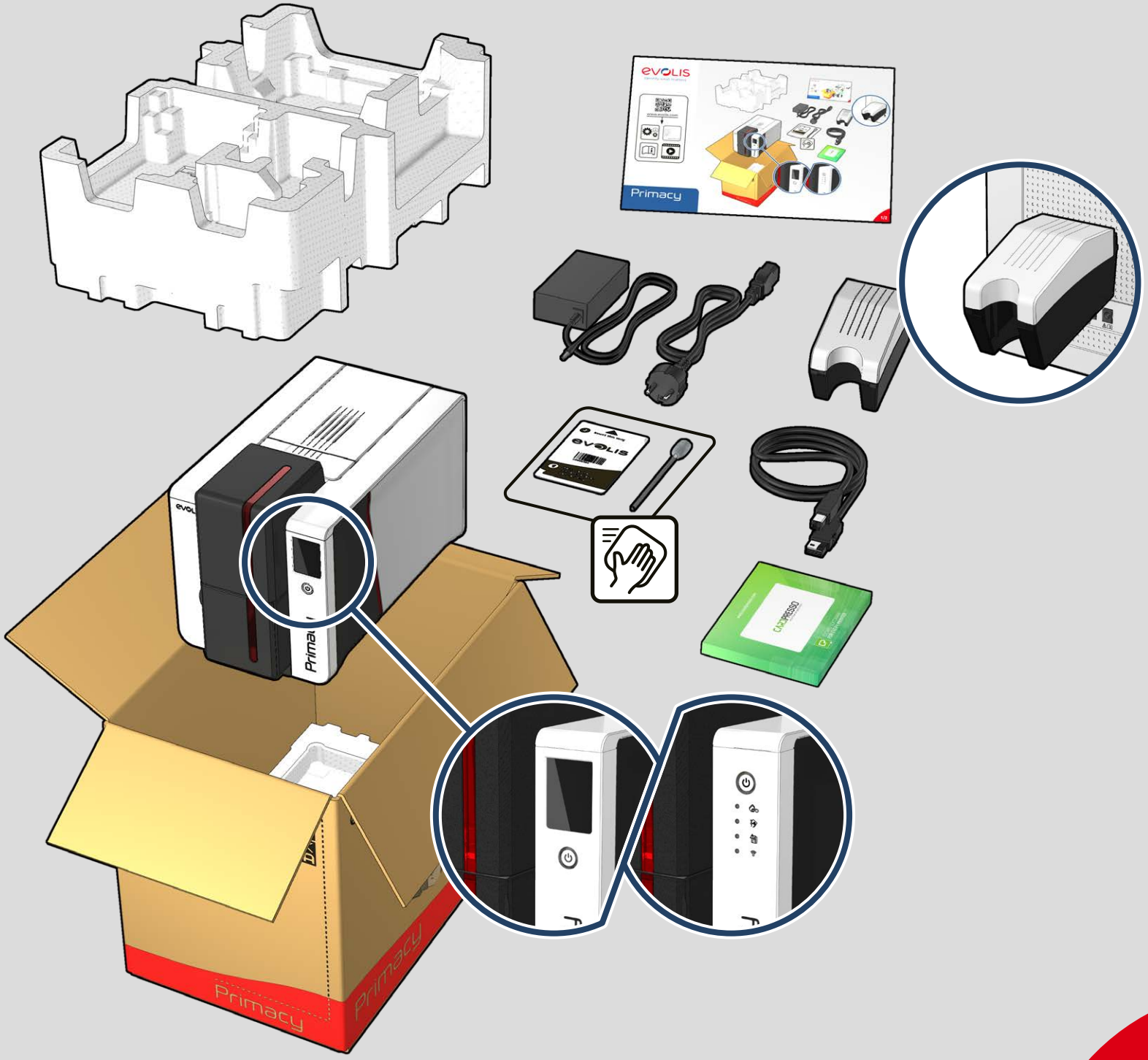

Primacy

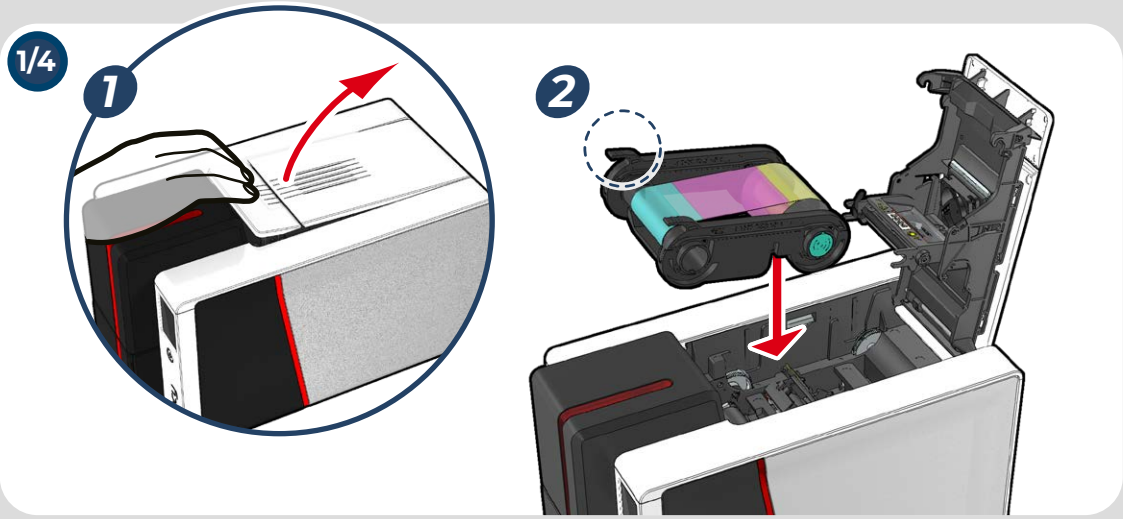

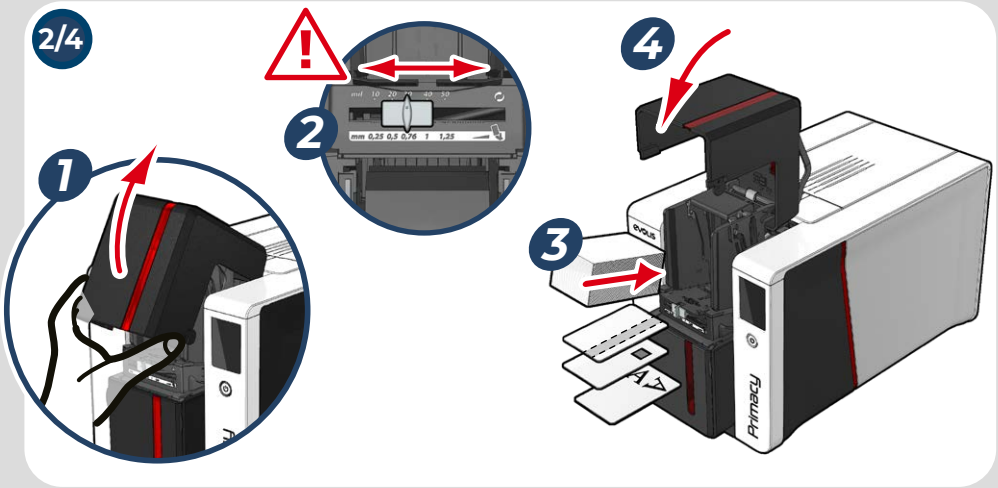

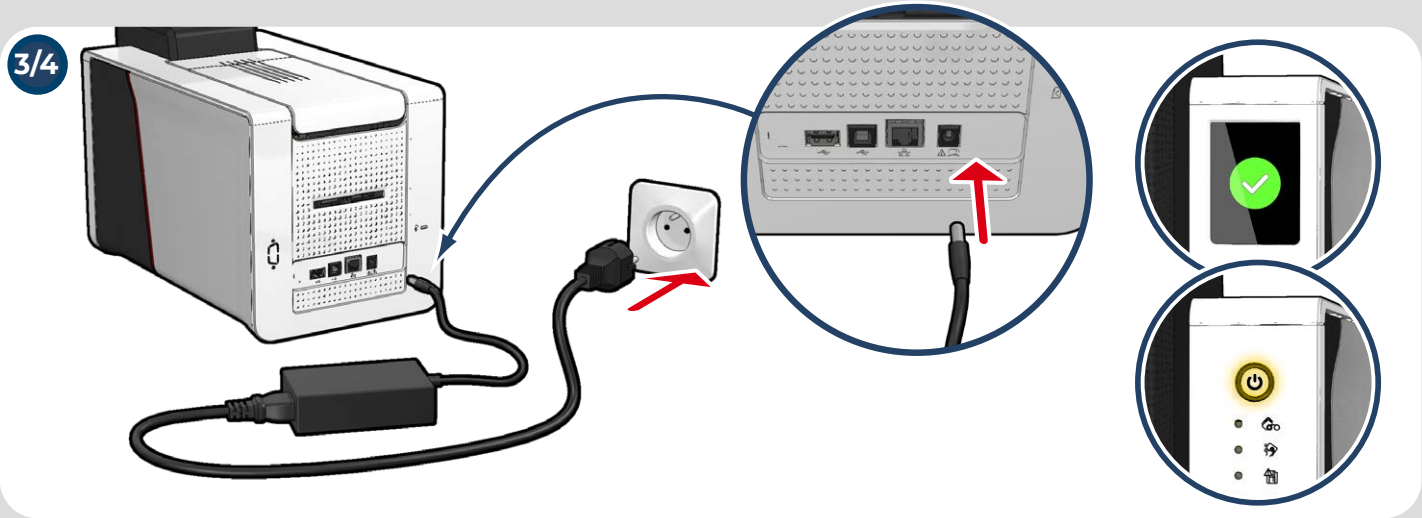

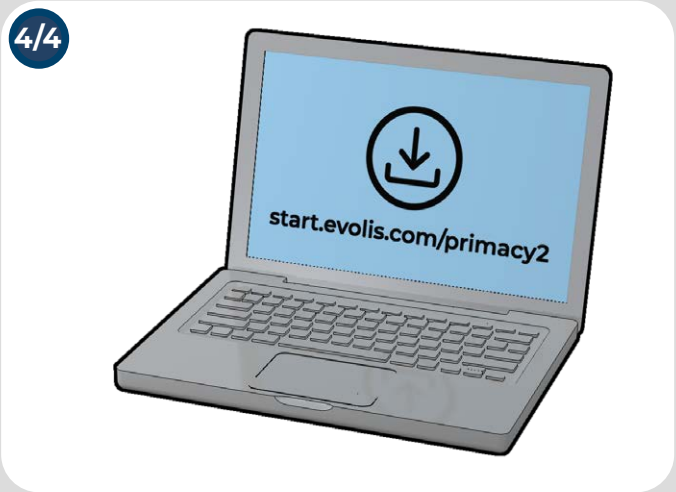

CP013540

CP013540 Rev. A0 · © 2021 Evolis - All rights reserved